C

4x

FOCCO
BATHROOM LIGHTING

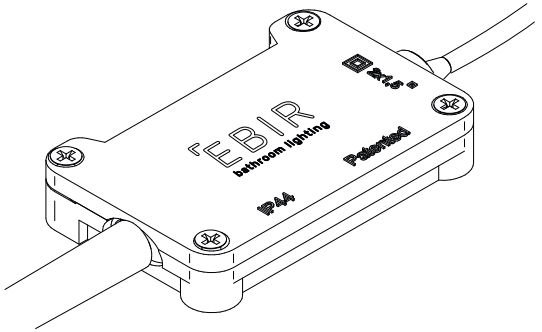

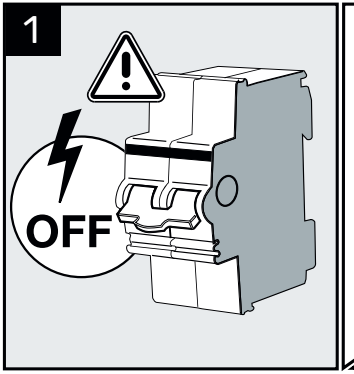

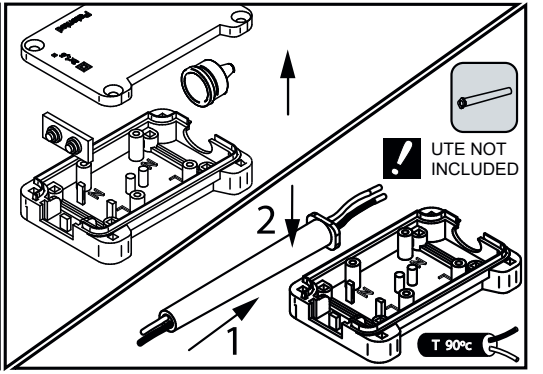

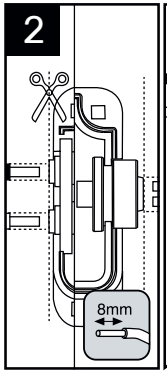

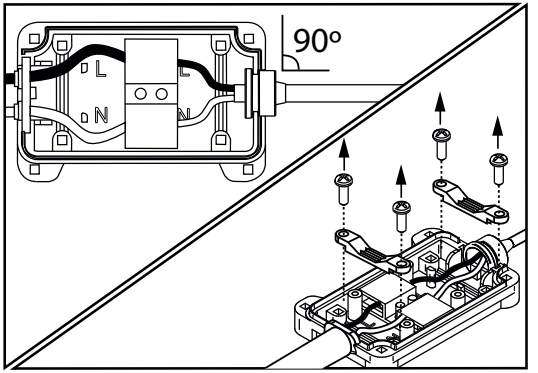

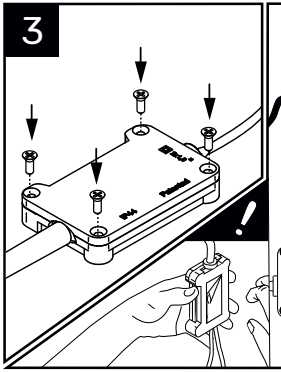

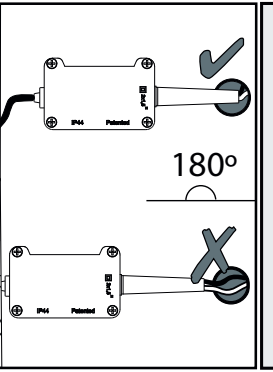

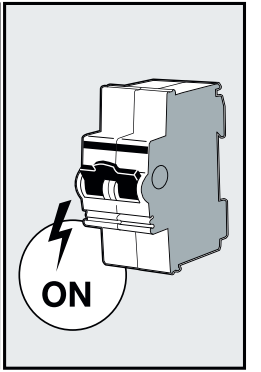

22
PAP